New High Current MOSFET Module Offers 177 μΩ $R_{DS(on)}$

By

William C. Kephart, Eric R. Motto
Application Engineering
Powerex Incorporated

Abstract – This paper describes a new family of high current MOSFET modules optimized for industrial electric vehicle applications. While the MOSFET module is configured as a six pack for an inverter topology, the MOSFET module can easily be converted to a high current dual or chopper for use in other topologies. Each element in the module consists of a single large area chip providing excellent avalanche characteristics and ultra low $R_{DS(on)}$. Chopper operation is further enhanced via reduced static losses in the free wheel diode by utilizing the reverse conduction characteristics of the MOSFET element.

Introduction

MOSFETs enjoy widespread use in low voltage power topologies such as inverters and choppers due to their low conduction losses, low switching losses, high frequency operation capability, inherent free wheeling diode and avalanche capability. These characteristics combine to create an efficient, robust power circuit. High current operation requires paralleling several discrete MOSFETs. While operating MOSFETs in parallel is relatively easy, this mode of packaging has several disadvantages: (1) Complex assembly requiring many components including the MOSFETs, a low inductance bus system, gate signal routing, electrical insulation system and heat removal system, (2) Low avalanche capability generally limited to the avalanche capability of one of the paralleled MOSFETS, (3) Reduced reliability due to the large number of components utilized. (4) Large area needed for the assembly.

In order to address the disadvantages of high current MOSFET applications, a new series of MOSFET modules has been introduced. This family of MOSFET modules are configured in a six pack (basic inverter topology) using a single large area element for each switch. The large area element concept results in a high avalanche capability and very low on resistance ($R_{DS(on)}$). The Module is an isolated base type giving the designer all the advantages of the familiar higher voltage IGBT module with regard to system packaging. Because of the common isolated base plate the inverter legs can be easily paralleled by simply connecting the output terminals together creating a dual with three times the current carrying capability of a single inverter leg. Creating a chopper module is easy by shorting the gates of upper MOSFETs.

New High Current MOSFET Module Offers 177 μΩ $R_{DS(on)}$
By William C. Kephart and Eric R. Motto

MOSFET Module Structure

The MOSFET Family consists of 200 ampere, 400 ampere and 600 ampere current rated modules at 75 volts, 100 volts and 150 volts. The entire family of modules shares the same package shown in figure 1. The Module schematic is shown in figure 2. The MOSFET module is housed in the U series high power type package utilizing the flow through configuration with bus connections one side and the three output terminals on the other side. The U series package is designed to minimize internal inductance [1]. A high reliability automotive type connector is used for the gate connections and the internal temperature sensor. The copper base plate combined with the large area element combine to deliver a low thermal resistance (0.096°C/W per element measured under the element for the 600A module). The large area element results in a very low $R_{DS(on)}$, as low as 177μΩ for the 75V, 600A module connected as a dual. In the six pack inverter configuration $R_{DS(on)}$ is 531 μΩ resulting in just 8.19 Watts conduction loss per element for an inverter supplying 150 amperes(RMS) output from a 48V bus and a switching frequency of 10 KHz.

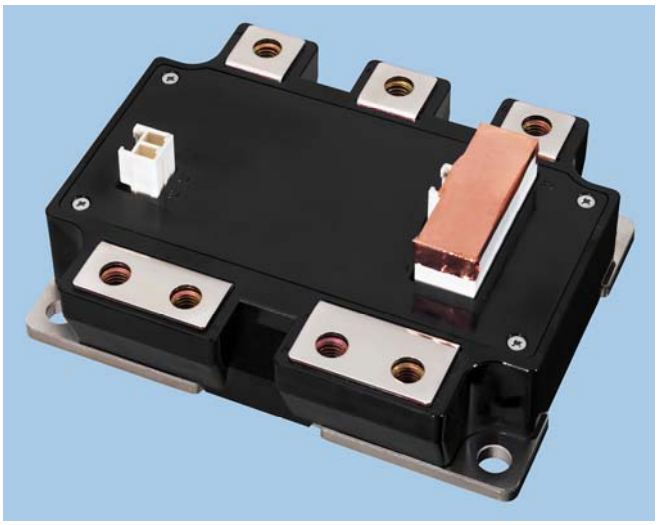

Figure 1: MOSFET Module Package

The MOSFET module approach to low voltage, high current applications offers the designer a much better packaging solution than a paralleled discrete MOSFET package solution. As an example, consider a 600A inverter circuit. With discrete 60 ampere MOSFETs in TO247AD packages, a total of 60 MOSFETs would be required assuming perfect sharing along with the necessary substrate or bus, interconnecting means, gate signal wiring, electrical isolation and thermal system. Sixty TO247AD package yields a footprint of 19,200mm^2 as compared to the MOSFET Module footprint of 9,900mm^2 The discrete approach has almost twice the footprint as the MOSFET Module.

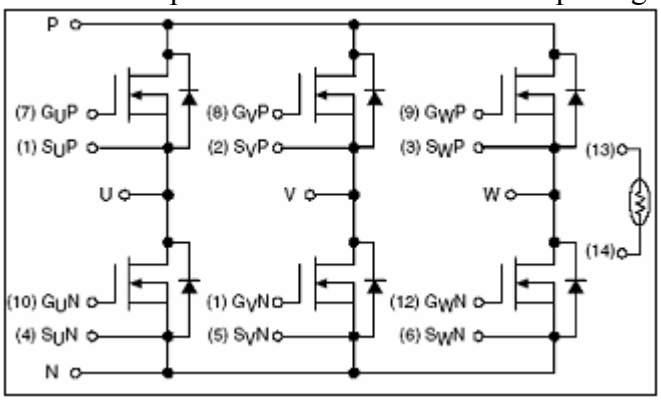

Figure 2: MOSFET Module Schematic

Temperature Sensing

One of the useful features of the MOSFET family that is needed in most if not all power electronic applications is the ability to sense temperature. In most power electronic systems temperature is typically monitored using a sensor mounted on the same heatsink as the power semiconductor module. The difficulty with this approach is that the temperature sensor is a significant distance from the source of heat generation, namely the MOSFET elements. In order to properly protect the MOSFET elements from experiencing an over temperature event the designer needs to know the worst case losses in the circuit and thermal impedances between the elements and the temperature sensor location so that perfect coordination exists between temperature sensor and the MOSFET elements[2]. Further, the designer must understand the complex relationships existing between these factors to protect the MOSFET elements from premature or catastrophic failure. The designer may opt to use a large safety factor in selecting the sensor to compensate for careful analysis resulting in under utilization of MOSFET capability.

The MOSFET module incorporates an integrated sensor within the module. By building in the temperature sensor many of the issues described above are eliminated and effective thermal protection of the module is achieved.

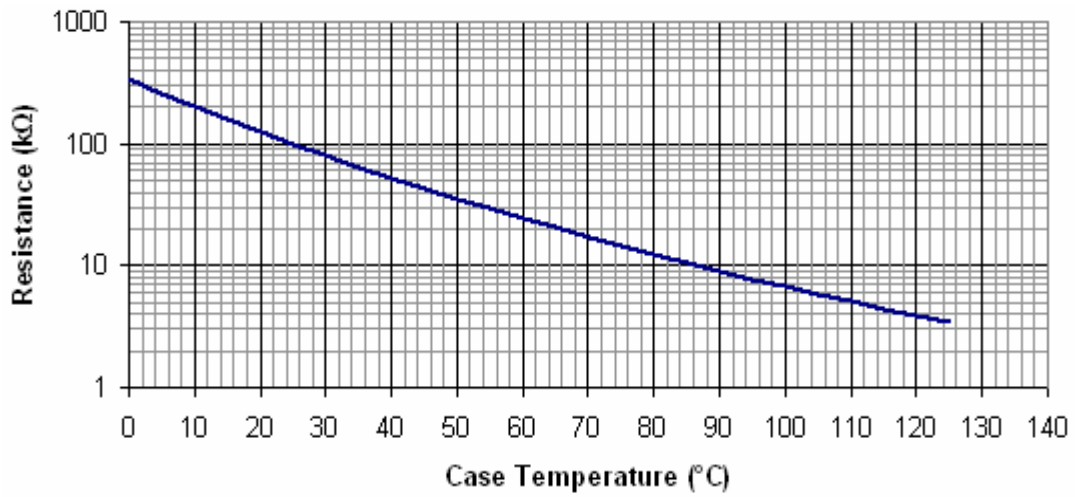

Figure 3: Thermistor Characteristic

Access to the internal thermistor allows accurate temperature monitoring for precise over temperature protection. Figure 3 shows the relationship between the thermistor's resistance and the Case Temperature.

Reverse Conduction Mode

One advantage of a MOSFET is its ability to act as a diode when reversed biased. This diode action functions as the device Free Wheel diode (FWD) common in voltage source inverter circuits. As with conventional FWDs, losses are incurred when current is flowing it the diode. In a typical induction motor drive, the conduction losses in FWD is in the range of 7% to 12% of the total losses for the switch depending on load power factor. For a chopper application, however, the chopper diode conduction loss can represent more than half the total losses. The MOSFET module can easily be converted to a chopper Module simply be shorting the gate to source on upper MOSFET allowing it to always act as a diode (see Figure 4). The designer can drastically reduce the diode conduction losses by applying gate voltage to MOSFET when the voltage for Drain to Source is negative. The body diode forward voltage drop is already lower than a similarly rated PIN diode because of the larger surface dictated by MOSFET requirements [3].

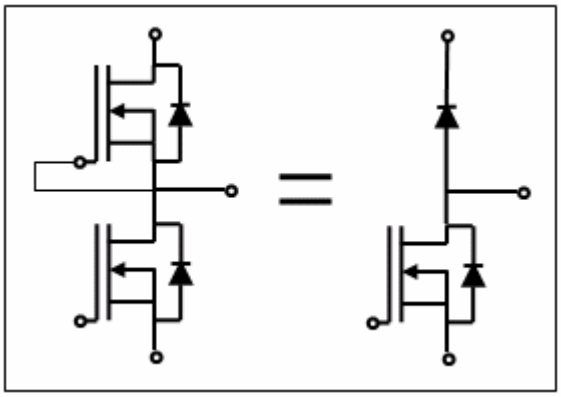

Figure 4: Converting a Dual MOSFET to a Chopper

Figure 5 shows the reduction in Vds as a function of gate to source voltage increases. This graph is for a 200 ampere, 75 volt MOSFET module. As can be seen from Figure 5 applying a Vgs of 8.0 Volts can reduce Vds by 50%. In chopper operation at 50% duty this reduction in Vds will result in a reduction of overall conduction losses by 25%.

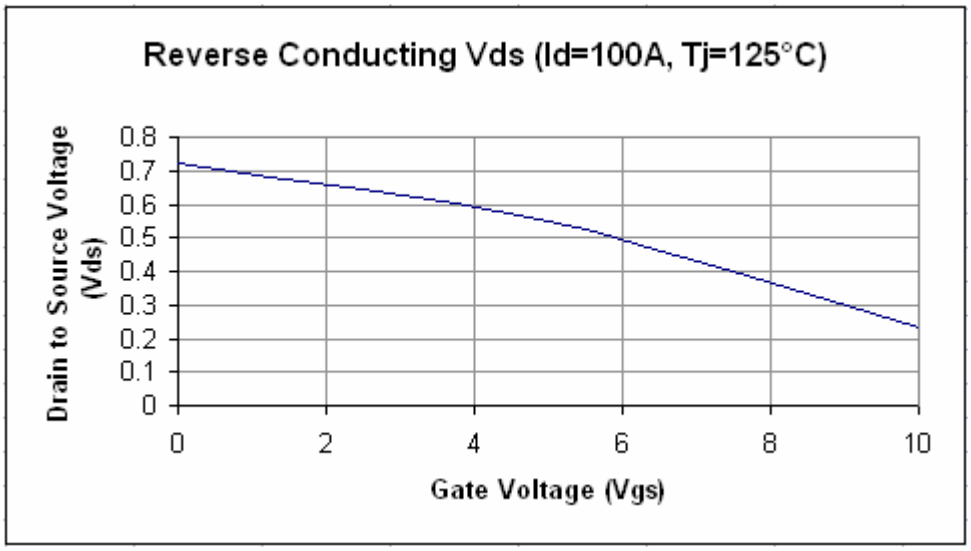

Figure 5: Reverse Conducting Characteristics

Avalanche Characteristics

The MOSFET module family has very good avalanche capacity due to the large area elements used for each MOSFET within the module. Figure 6 shows an FM600TU-3A module operated in an avalanche condition. This is a 600 ampere, 150 volt module. As can be observed at approximately 185V the MOSFET goes into avalanche. The device voltage spike, Vds, due to the parasitic circuit inductance stops increasing and become flat topped as the current continues to decrease to zero at a continuous rate. This is a typical avalanche event and it is repeatable as long as the avalanche energy does not exceed the data sheet value and the junction temperature does not exceed the rated junction temperature of 125°C.

The avalanche energy capability can be found from the data sheet, For example, the FM600TU-3A [4] specifies the Avalanche current as 300 amperes through a 10 micro-henry inductance. Avalanche energy is then:

$$E_A = \frac{1}{2} L I_{DA}^2$$

For the FM600TU-3A this is 450mj per element.

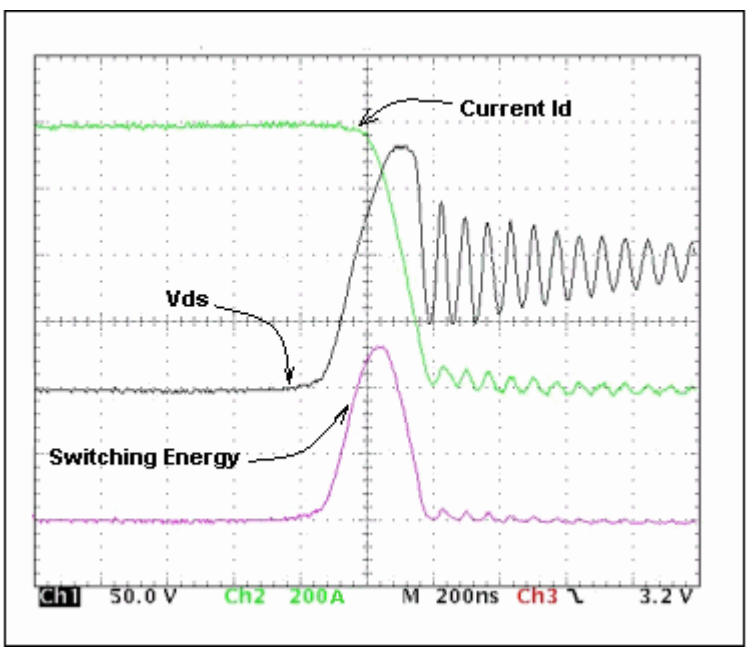

Figure 6: Avalanche Characteristic Waveforms

New High Current MOSFET Module Offers 177 μΩ $R_{DS(on)}$
By William C. Kephart and Eric R. Motto

Typical Applications of MOSFET module

The standard MOSFET module package is designed so that it can be used as either a three phase inverter or a DC chopper. Figure 10 is a schematic diagram showing the MOSFET module used as a DC chopper. This configuration is useful for DC motor speed control and regulation of high DC currents in applications such as welding power supplies or battery chargers. In order to use the MOSFET module as a high current chopper the three output terminals (U,V,W) are connected parallel and shorts are applied from the gate to source of the upper MOSFETs. The upper MOSFET is not used as an active switch but it is still useful as the main free wheeling diode. It is also possible to make a buck configuration by shorting the gate to source on the lower MOSFET and applying the gate drive to the upper device. Table 1 shows the typical chopper mode DC output current for each of the available MOSFET modules. The current given in this table is only for the specific conditions shown. For other conditions the usable current can be calculated using the loss simulation software available from the Powerex website.

In high current switching applications it is important to minimize the DC bus inductance in order to control transient voltages. The best way to do this is use of a laminated bus as shown in Figure 11. By connecting the DC link capacitors to the modules P and N terminals as shown in Figure 11 the transient voltage can be controlled without additional clamp or snubber circuitry. In applications with higher DC bus voltages in may be necessary to connect an additional low impedance film type capacitor right at the modules P and N terminals.

Module Part Number	Nominal Module Rating (A/V)	Typical DC Bus Voltage	Chopper Mode Operation Figure 11 DC Output Current (A) D=90%, F_{sw}=10KHz, T_C=100C	Three Phase Sinusoidal Inverter Operation One Module: Figure 9 Output Current (ARMS) F_{SW}=10KHz, T_C=100C	Three Phase Sinusoidal Inverter Operation Three Modules: Figure 7 Output Current (ARMS) F_{SW}=10KHz, T_C=100C
FM200TU-07A	200A/75V	24V	555	275	825
FM400TU-07A	400A/75V	24V	750	380	1140
FM600TU-07A	600A/75V	24V	900	510	1530
FM200TU-2A	200A/100V	48V	375	195	585
FM400TU-2A	400A/100V	48V	555	275	825
FM600TU-2A	600A/100V	48V	735	370	1110
FM200TU-3A	200A/150V	72V	270	130	390
FM400TU-3A	400A/150V	72V	405	205	615
FM600TU-3A	600A/150V	72V	525	270	810

Table 1: MOSFET Module Applications

Figure 8 is a schematic showing the MOSFET module used as three phase inverter. Figure 9 shows a typical layout for one MOSFET module used as a three phase inverter and Figure 7 shows the layout for three MOSFET modules used as a high current inverter. Table 1 shows the typical RMS output current per phase available from these

two configurations. As noted above these currents are for the specific conditions indicated in the table. For other conditions the usable current can be calculated using the loss simulation software available from the Powerex website.

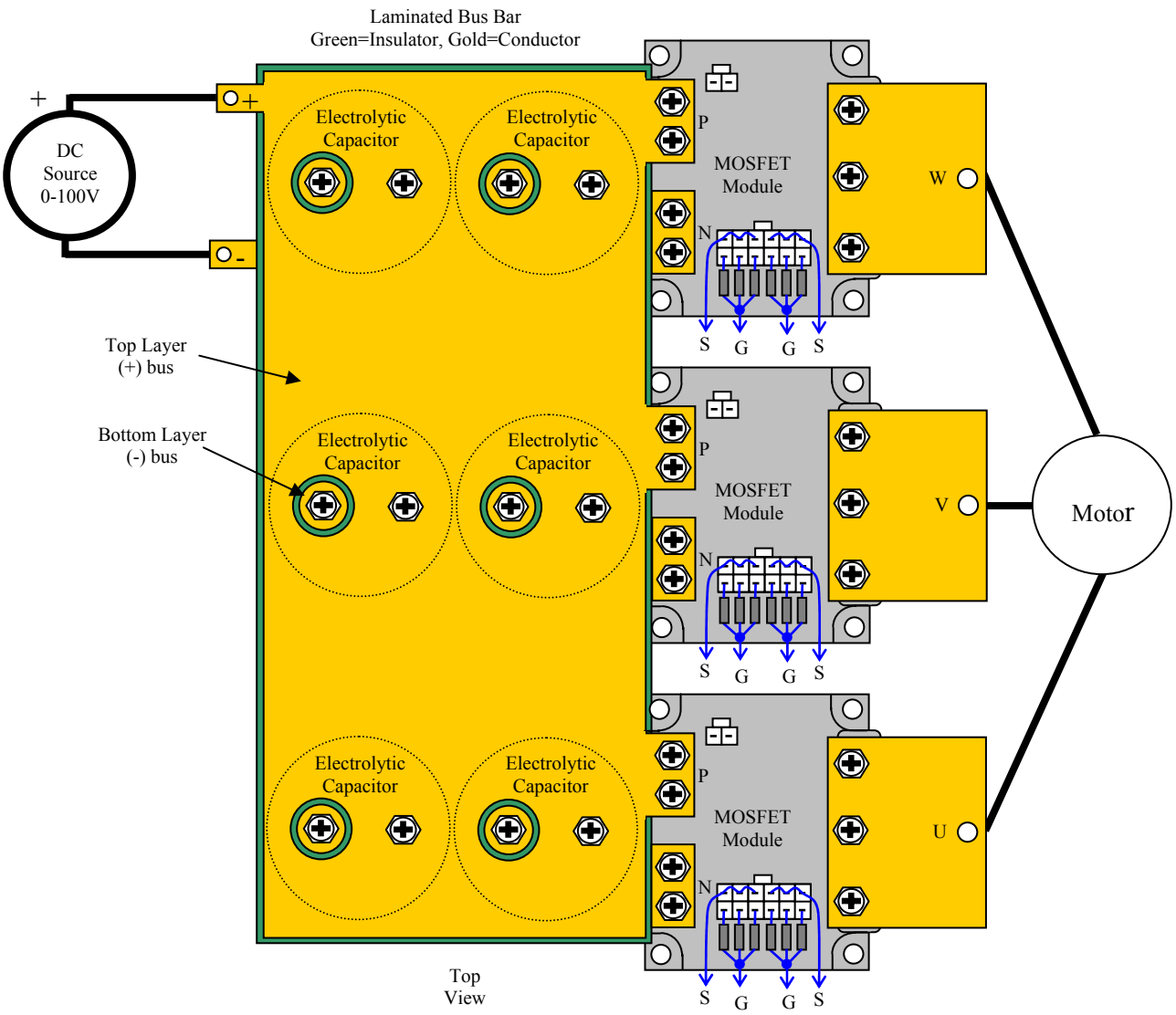

Figure 7: MOSFET Module High Current Three Phase Inverter

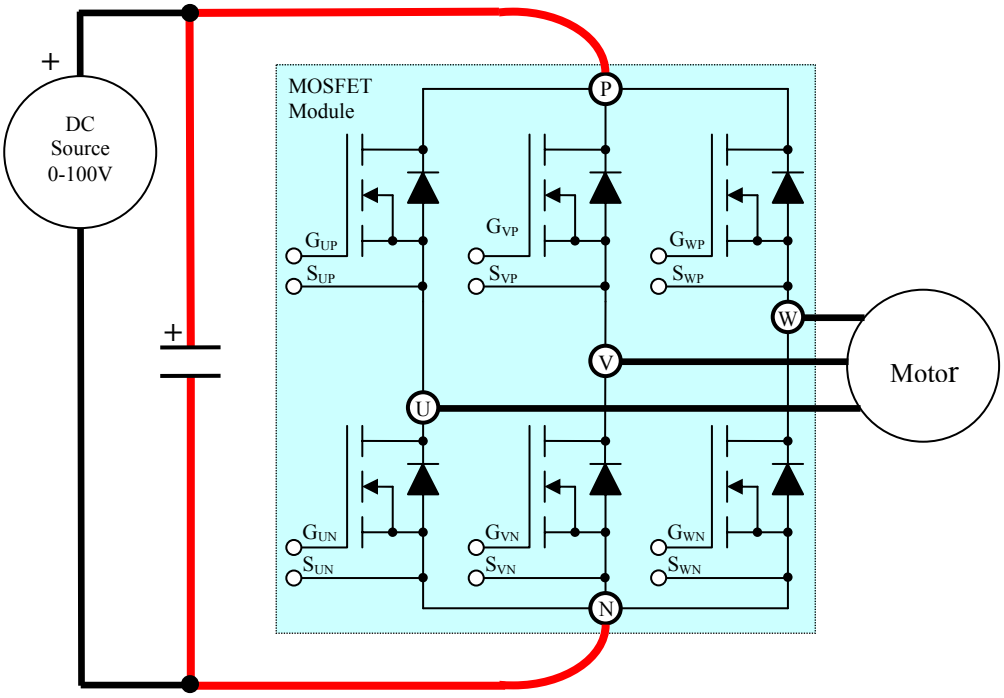

Figure 8: MOSFET Module Three Phase Inverter

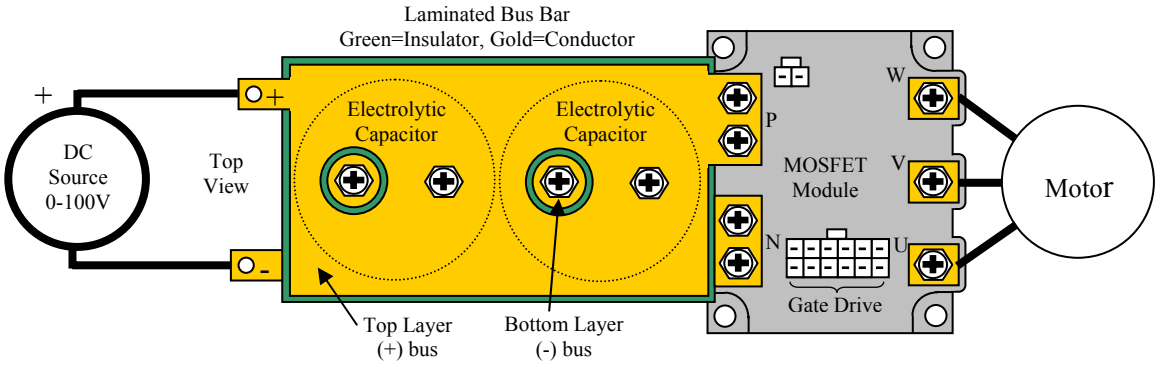

Figure 9: Layout for MOSFET Module Three Phase Inverter

New High Current MOSFET Module Offers 177 μΩ $R_{DS(on)}$
By William C. Kephart and Eric R. Motto

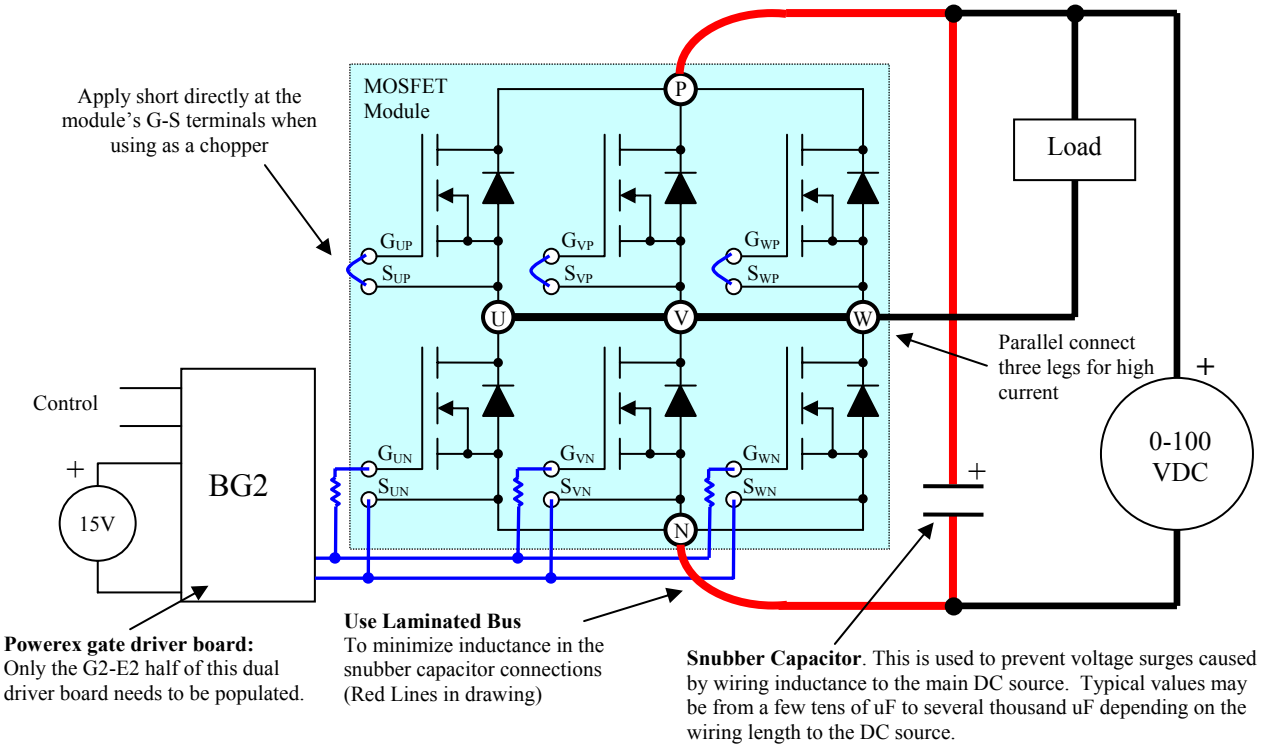

Figure 10: MOSFET Module High Current Chopper/DC Motor Control

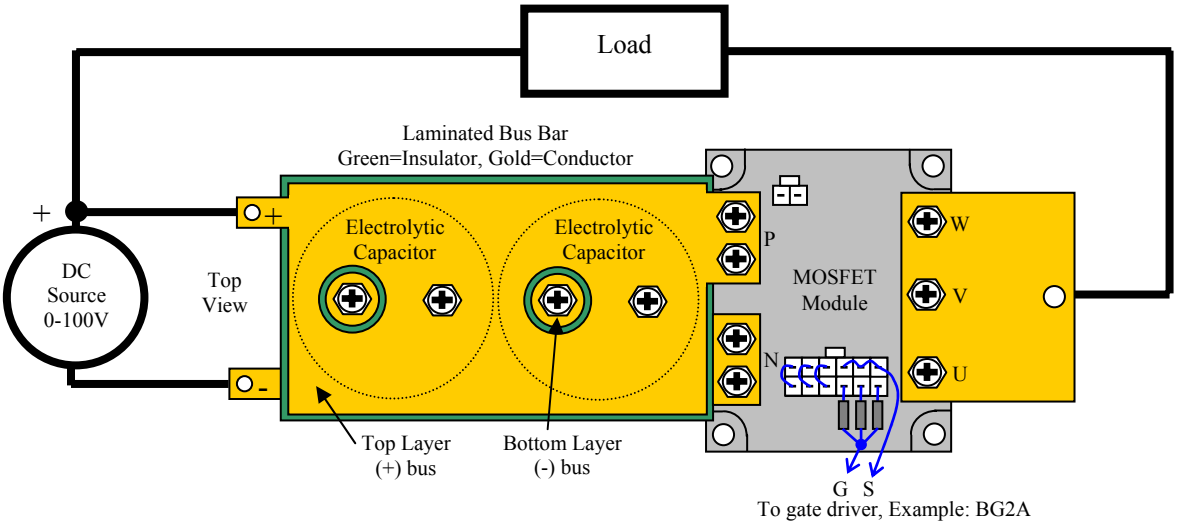

Figure 11: MOSFET Module High Current Chopper/DC Motor Control

Conclusion

This paper has presented a new Line of MOSFET Modules that utilizes large area MOSFET elements to provide a reliable, efficient solution for low voltage, high current power applications. The superior avalanche capability and integrated temperature sensing feature offer the opportunity for a robust design. These new modules provide added design flexibility and offer a clear packaging advantage compared to multi-paralleled MOSFET solutions.

References

[1] Eric R. Motto, "A New Low Inductance IGBT Module Package", PCIM Conference, 1996
[2] Eric R. Motto, et. Al., "New compact IGBT Modules with Integrated Current and Temperature Sensors", PET Conference, 2005
[3] Kassakian, John G., Martin F. Schlecht, and George C. Verghese, "Principles of Power Electronics", Addison Wesley, 1991, ISBN 0-201-09689-7
[4] Powerex, data sheet of the MOSFET module FM600TU-7A; 09/2005